Temperature Monitoring Relay
K8AB-TH

CSM_K8AB-TH_DS_E_3_3

Compact and Slim Relay Ideal for Temperature Alarms and Monitoring

- Excessive temperature increases can be prevented and abnormal temperatures can be monitored.
- Temperature monitoring in slim design with a width of just 22.5 mm.
- Simple function settings using DIP switch.
- Universal-input support for thermocouple or Pt100 sensor input.
- Selectable output relay: Non-fail safe/fail safe.
- Alarm status identification with LED indicator.

⚠ Refer to *Safety Precautions for All Temperature Controllers*.

For the most recent information on models that have been certified for safety standards, refer to your OMRON website.

Features

- This Temperature Monitoring Relay was designed specially for monitoring abnormal temperatures to prevent excessive temperature increase and to protect equipment.
- A relay capacity of 3 A at 250 VAC (resistive load) is provided in a slim body only 22.5 mm wide.
  An output latch function is also supported.
- Settings can be made and functions can be selected using the DIP switch.
- Reduce the number of models by using universal-input support for thermocouple or Pt100 sensor input.

Selecting Functions and Modes

- The following settings are provided: alarm mode (upper limit/lower limit), enable/disable latch, °C/°F, relay output non-fail safe/fail safe, setting protection.

Terminal Wiring with Ferrules

- Wire with 2 × 2.5 mm² solid wire or 2 × 1.5 mm² wiring ferrules.

Third-party Certification of CE Mark Compliance, Certified UL Standard Compliance, and Certified TÜV and SUD Standard Compliance

Model Number Structure

■ Model Number Legend

K8AB-TH1□□
1 2 3 4

1. **Basic Model**
   K8AB: Measuring and Monitoring Relay
2. **Function**
   TH1: Temperature Monitoring Relay
3. **Setting Range**
   1: Low-temperature range (0 to 399°C: setting in increments of 1°C)
   2: High-temperature range (0 to 1700°C max.: setting in increments of 10°C)
4. **Output Form**
   S: One SPDT relay output

Ordering Information

■ List of Models

Size	Supply voltage	Type	Number of outputs	Input type	Setting unit (setting range)	Model
K8AB-TH 22.5 × 90 × 100 mm	100 to 240 VAC	Temperature input	1 (relay)	Thermocouple/Pt100	Unit: 1°C/°F (0 to 399°C/°F)	K8AB-TH11S
				Thermocouple	Unit: 10°C/°F (See note 1.)	K8AB-TH12S
	24 VAC/VDC			Thermocouple/Pt100	Unit: 1°C/°F (0 to 399°C/°F)	K8AB-TH11S
				Thermocouple	Unit: 10°C/°F (See note 1.)	K8AB-TH12S

Note: 1. Refer to page 3 for setting ranges.
2. Specify the power supply voltage when ordering. Different models must be ordered for 100 to 240 VAC and 24 VAC/DC.

Specifications

■ Ratings

Item		Power supply voltage	100 to 240 VAC 50/60 Hz	24 VAC 50/60 Hz or 24 VDC
Allowable voltage range			85% to 110% of power supply voltage	
Power consumption			5 VA max.	2 W max. (24 VDC), 4 VA max. (24 VAC)
Sensor inputs	K8AB-TH11S		Thermocouple: K, J, T, E; Platinum-resistance thermometer: Pt100	
	K8AB-TH12S		Thermocouple: K, J, T, E, B, R, S, PLII	
Output relay			One SPDT relay (3 A at 250 VAC, resistive load)	
External inputs (for latch setting)	Contact input		ON: 1 kΩ max., OFF: 100 kΩ min.	
	Non-contact input		ON residual voltage: 1.5 V max., OFF leakage current: 0.1 mA max.	
			Leakage current: Approx. 10 mA	
Setting method			Rotary switch setting (set of three switches)	
Indicators			Power (PWR): Green LED, Relay output (ALM): Red LED	
Other functions			Alarm Mode (upper limit/lower limit), non-fail safe/fail safe selection, output latch, setting protection, temperature unit °C/°F	
Ambient operating temperature			–10 to 55°C (with no condensation or icing)	
Ambient operating humidity			Relative humidity: 25% to 85%	
Storage temperature			–25 to 65°C (with no condensation or icing)	

■ Characteristics

Setting accuracy		±2.0% of full scale
hysteresis width		2°C
Output relay	Resistive load	3 A at 250 VAC (cosϕ = 1), 3 A at 30 VDC (L/R = 0 ms)
	Inductive load	1 A at 250 VAC (cosϕ = 0.4), 1 A at 30 VDC (L/R = 7 ms)
	Minimum load	10 mA at 5 VDC
	Maximum contact voltage	250 VAC
	Maximum contact current	3 A AC
	Maximum switching capacity	1,500 VA
	Mechanical life	10,000,000 operations
	Electrical life	Make: 50,000 times, Break: 30,000 times
Sampling cycle		500 ms
Insulation resistance		20 MΩ (at 500 V) between charged terminals and exposed uncharged parts 20 MΩ (at 500 V) between any charged terminals (i.e., between input, output, and power supply terminals) 20 MΩ (at 500 V) between contacts (open)
Dielectric strength		2,000 VAC 50/60 Hz for 1 min between charged terminals of different polarity
Vibration resistance		Vibration of 10 to 55 Hz and acceleration of 50 m/s^2 for 5 min with 10 sweeps each in X, Y, and Z directions
Shock resistance		150 m/s^2 (100 m/s^2 for relay contacts) 3 times each in 6 directions in X, Y, and Z directions
Weight		130 g
Degree of protection		IP20
Memory protection		Non-volatile memory (number or writes: 200,000)
Safety Standards	Approved standards	UL 61010-1, CSA C22.2 No. 1010-1, KOSHA
	EMC	EN 61326
	Application standards	EN 61010-1 (pollution level 2, overvoltage category II)
EMC		EMI: EN 61326 Radiation Interference Field Intensity: EN 55011 Group 1 Class A Noise Terminal Voltage: EN 55011 Group 1 Class A EMS: EN 61326 Immunity ESD: EN 61000-4-2: 4 kV contact discharge (level 2) 8 kV air discharge (level 3) Immunity RF: EN 61000-4-3: 10 V/m, amplitude-modulated (80 MHz to 1 GHz, 1.4 GHz to 2 GHz) (level 3) Immunity Burst: EN 61000-4-4: 2 kV power line (level 3) 2 kV output line (relay output) (level 4) 1 kV measurement line and I/O signal lines (level 4) Immunity Conducted Disturbance: EN 61000-4-6: 3 V (0.15 to 80 MHz) (level 3) Immunity Surge: EN 61000-4-5: 1 kV line-to-line: power line, output line (relay output) (level 2) 2 kV line-to-ground: power line, output line (relay output) (level 3) Commercial Frequency Immunity Magnetic Field: EN 61000-4-8: 30 A/m (50Hz) continuous time Immunity Voltage Dip/Interrupting: EN 61000-4-11: 0.5 cycle, 100% (rated voltage)
Terminal screw tightening torque		0.54 to 0.55 N·m
Crimp terminals		Two solid wires of 2.5 mm^2 or two ferrules of 1.5 mm^2 with insulation sleeves can be tightened together.
Case color		Munsell 5Y8/1 (ivory)
Case material		ABS resin (self-extinguishing resin)
Mounting		Mounted to DIN Track or with M4 screws
Dimensions		22.5 × 100 × 90 mm (W × D × H)

■ Setting Ranges

K8AB-TH11S

Centigrade

Input	K	J	T	E	Pt100
Setting temperature range (500, 400, 300, 200, 100, 0)	399 / 0	399 / 0	399 / 0	399 / 0	399 / 0
Minimum setting increment	1°C				

Fahrenheit

Input	K	J	T	E	Pt100
Setting temperature range (500, 400, 300, 200, 100, 0)	399 / 0	399 / 0	399 / 0	399 / 0	399 / 0
Minimum setting increment	1°F				

K8AB-TH12S

Centigrade

Input	K	J	T	E	B	R	S	PLII
Setting temperature range (1,800, 1,700, 1,600, 1,500, 1,400, 1,300, 1,200, 1,100, 1,000, 900, 800, 700, 600, 500, 400, 300, 200, 100, 0)	1,300 / 0	850 / 0	400 / 0	600 / 0	1,800 / 100	1,700 / 0	1,700 / 0	1,300 / 0
Minimum setting increment	10°C							

Fahrenheit

Input	K	J	T	E	B	R	S	PLII
Setting temperature range (3,200, 3,100, 3,000, 2,900, 2,800, 2,700, 2,600, 2,500, 2,400, 2,300, 2,200, 2,100, 2,000, 1,900, 1,800, 1,700, 1,600, 1,500, 1,400, 1,300, 1,200, 1,100, 1,000, 900, 800, 700, 600, 500, 400, 300, 200, 100, 0)	2,300 / 0	1,500 / 0	700 / 0	1,100 / 0	3,200 / 300	3,000 / 0	3,000 / 0	2,300 / 0
Minimum setting increment	10°F							

Connections

■ Wiring Diagrams

K8AB-TH11S

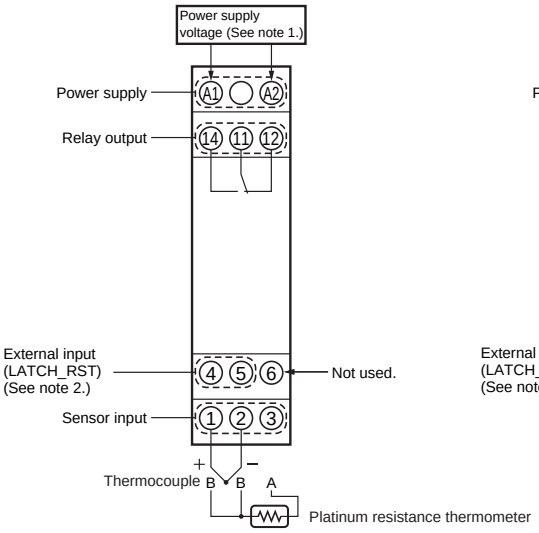

K8AB-TH12S

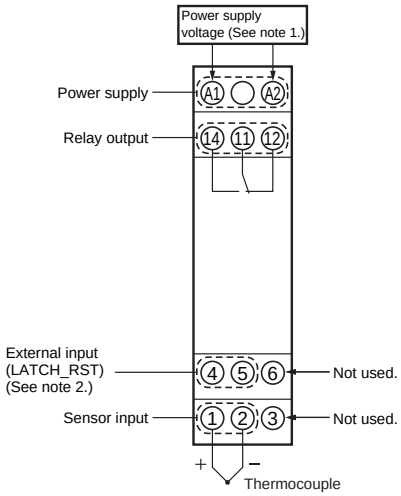

Note: 1. The input power supply depends on the model: 100 to 240 VAC or 24 VAC/VDC (no polarity)

2. Wiring of the external input terminals is as shown below.

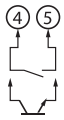

■ Operation (Using the Upper-limit Alarm Mode)

Output Latch Enabled (Default Setting: Latch Enabled)

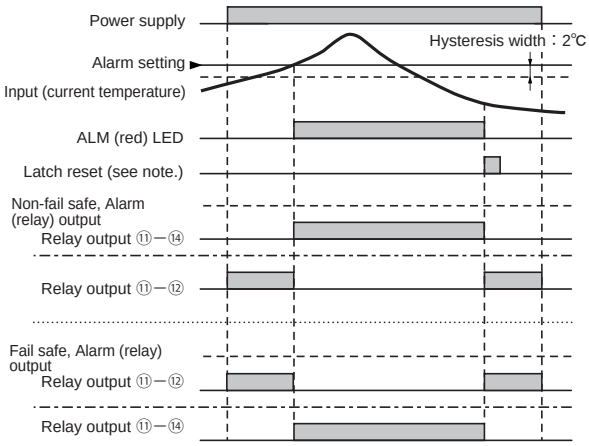

Note: The output latch is reset using the output latch reset button on the Temperature Monitoring Relay or the external input terminal.

Output Latch Disabled

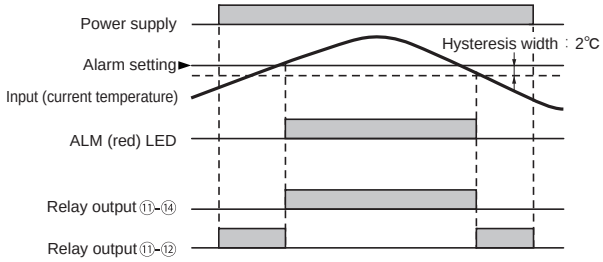

Nomenclature

■ Front Operations

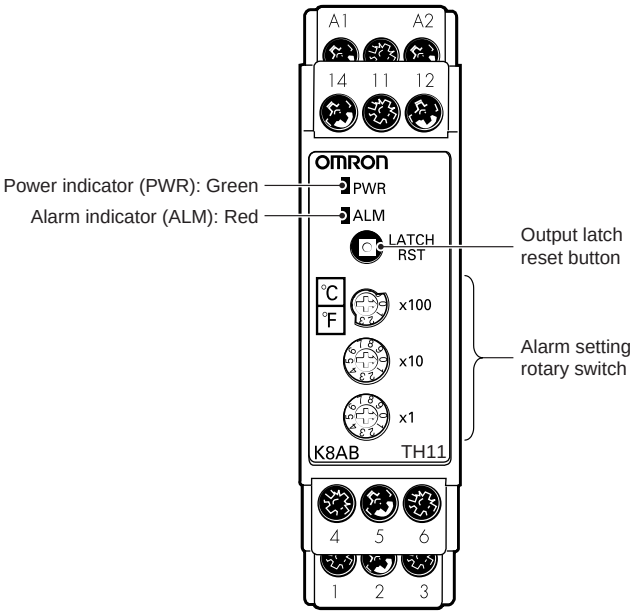

Indicators

Item	Usage
Power indicator (PWR)	Lit: Power supply is ON. Flashing: SV protected.
Alarm indicator (ALM)	Lit: Relay is operating. Flashing: Sensor is disconnected or there is a Temperature Monitoring Relay error. (See note 1.).

Operation Switches

Item	Usage
Output latch reset button	The output latch can be reset by pressing this button. (Enabled when latch is enabled.) (See note 2.)
Alarm setting rotary switch	Set each digit of the alarm set temperature. K8AB-TH11S: x1, x10, x100 digits K8AB-TH12S: x10, x100, x1000 digits

Note: **1.** The ALM indicator will flash and the relay outputs will turn ON if any of the following conditions occur.

(1) The temperature input value exceeds the specified range.

(2) The temperature set value exceeds the specified range.

(3) There is an error in the internal circuits.

2. The SV protection will function when the latch reset button is pressed for at least 5 s.
The power indicator will flash when the SV is protected. To release the protection, press the latch reset button again for at least 5 s.

Alarm Setting Rotary Switch

Turn the arrow in the direction of the number to set.

■ Function Setting DIP Switch

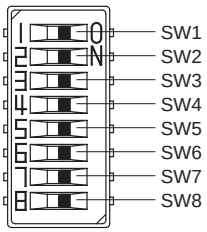

This DIP switch is provided on the side of the Temperature Monitoring Relay. (All switches are OFF for the default settings.)

	Function			Default
SW1	Alarm mode	OFF	Upper-limit alarm	OFF
		ON	Lower-limit alarm	
SW2	Output latch selector	OFF	Enabled	OFF
		ON	Disabled	
SW3	Operation selector: Non-fail safe/ fail safe	OFF	Non-fail safe	OFF
		ON	Fail safe	
SW4	Temperature unit	OFF	°C	OFF
		ON	°F	
SW5	Input type selector	Refer to the following table.		OFF
SW6				OFF
SW7				OFF
SW8	Not used.	---		OFF

K8AB-TH11S

	Sensor type							
	K	**J**	**T**	**E**	**Pt100***	**Pt100***	**Pt100***	**Pt100***
SW5	OFF	OFF	OFF	OFF	ON	ON	ON	ON
SW6	OFF	OFF	ON	ON	OFF	OFF	ON	ON
SW7	OFF	ON	OFF	ON	OFF	ON	OFF	ON

* The type will be Pt100 for any of these settings.

K8AB-TH12S

	Sensor type							
	K	**J**	**T**	**E**	**B**	**R**	**S**	**PLII**
SW5	OFF	OFF	OFF	OFF	ON	ON	ON	ON
SW6	OFF	OFF	ON	ON	OFF	OFF	ON	ON
SW7	OFF	ON	OFF	ON	OFF	ON	OFF	ON

■ Functions

SV Protection

This function protects (i.e., prohibits changing) the alarm setting, operating method, and modes for the Temperature Monitoring Relay that have been set on the rotary switches and DIP switch.

The protection function is activated by pressing the output latch reset button on the Temperature Monitoring Relay for at least 5 s or by turning ON the input to the external input terminal for at least 5 s.

The power indicator will flash when the protection is activated.

The protection function can be released by pressing the output latch reset button on the Temperature Monitoring Relay for at least 5 s or by turning ON the input to the external input terminal for at least 5 s.

The power indicator will light while the protection is being reset.

Dimensions

Note: All units are in millimeters unless otherwise indicated.

■ Temperature Monitoring Relay

K8AB-TH

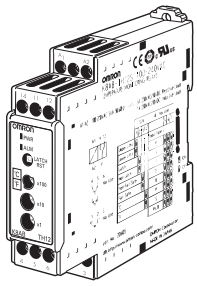

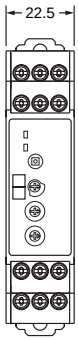

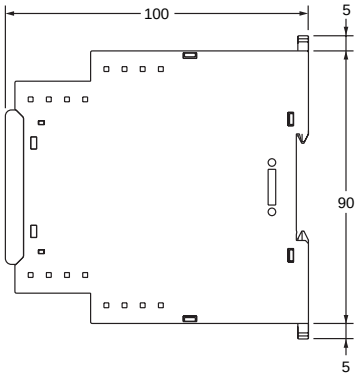

Mounting Hole Dimensions

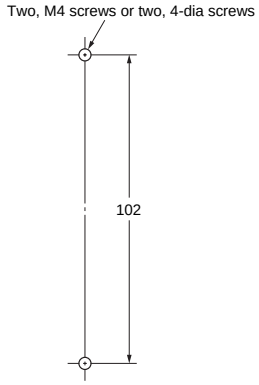

Note: Pull out and use the hooks when mounting using screws.

■ Track Mounting Products (Sold Separately)

Mounting Track

PFP-100N
PFP-50N

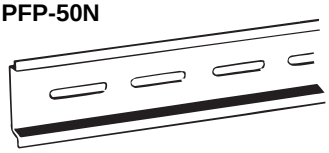

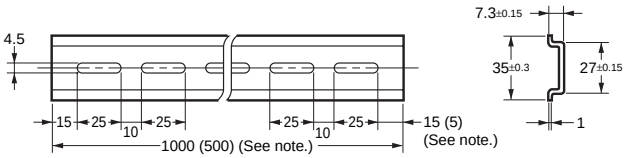

Note: Dimensions in parentheses are for the PFP-50N.

Safety Precautions

Refer to *Safety Precautions for All Temperature Controllers*.

ALL DIMENSIONS SHOWN ARE IN MILLIMETERS.
To convert millimeters into inches, multiply by 0.03937. To convert grams into ounces, multiply by 0.03527.

In the interest of product improvement, specifications are subject to change without notice.

Terms and Conditions Agreement

Read and understand this catalog.
Please read and understand this catalog before purchasing the products. Please consult your OMRON representative if you have any questions or comments.

Warranties.
(a) Exclusive Warranty. Omron's exclusive warranty is that the Products will be free from defects in materials and workmanship for a period of twelve months from the date of sale by Omron (or such other period expressed in writing by Omron). Omron disclaims all other warranties, express or implied.
(b) Limitations. OMRON MAKES NO WARRANTY OR REPRESENTATION, EXPRESS OR IMPLIED, ABOUT NON-INFRINGEMENT, MERCHANTABILITY OR FITNESS FOR A PARTICULAR PURPOSE OF THE PRODUCTS. BUYER ACKNOWLEDGES THAT IT ALONE HAS DETERMINED THAT THE
PRODUCTS WILL SUITABLY MEET THE REQUIREMENTS OF THEIR INTENDED USE.
Omron further disclaims all warranties and responsibility of any type for claims or expenses based on infringement by the Products or otherwise of any intellectual property right. (c) Buyer Remedy. Omron's sole obligation hereunder shall be, at Omron's election, to (i) replace (in the form originally shipped with Buyer responsible for labor charges for removal or replacement thereof) the non-complying Product, (ii) repair the non-complying Product, or (iii) repay or credit Buyer an amount equal to the purchase price of the non-complying Product; provided that in no event shall Omron be responsible for warranty, repair, indemnity or any other claims or expenses regarding the Products unless Omron's analysis confirms that the Products were properly handled, stored, installed and maintained and not subject to contamination, abuse, misuse or inappropriate modification. Return of any Products by Buyer must be approved in writing by Omron before shipment. Omron Companies shall not be liable for the suitability or unsuitability or the results from the use of Products in combination with any electrical or electronic components, circuits, system assemblies or any other materials or substances or environments. Any advice, recommendations or information given orally or in writing, are not to be construed as an amendment or addition to the above warranty.
See http://www.omron.com/global/ or contact your Omron representative for published information.

Limitation on Liability; Etc.
OMRON COMPANIES SHALL NOT BE LIABLE FOR SPECIAL, INDIRECT, INCIDENTAL, OR CONSEQUENTIAL DAMAGES, LOSS OF PROFITS OR PRODUCTION OR COMMERCIAL LOSS IN ANY WAY CONNECTED WITH THE PRODUCTS, WHETHER SUCH CLAIM IS BASED IN CONTRACT, WARRANTY, NEGLIGENCE OR STRICT LIABILITY.
Further, in no event shall liability of Omron Companies exceed the individual price of the Product on which liability is asserted.

Suitability of Use.
Omron Companies shall not be responsible for conformity with any standards, codes or regulations which apply to the combination of the Product in the Buyer's application or use of the Product. At Buyer's request, Omron will provide applicable third party certification documents identifying ratings and limitations of use which apply to the Product. This information by itself is not sufficient for a complete determination of the suitability of the Product in combination with the end product, machine, system, or other application or use. Buyer shall be solely responsible for determining appropriateness of the particular Product with respect to Buyer's application, product or system. Buyer shall take application responsibility in all cases.
NEVER USE THE PRODUCT FOR AN APPLICATION INVOLVING SERIOUS RISK TO LIFE OR PROPERTY OR IN LARGE QUANTITIES WITHOUT ENSURING THAT THE SYSTEM AS A WHOLE HAS BEEN DESIGNED TO ADDRESS THE RISKS, AND THAT THE OMRON PRODUCT(S) IS PROPERLY RATED AND INSTALLED FOR THE INTENDED USE WITHIN THE OVERALL EQUIPMENT OR SYSTEM.

Programmable Products.
Omron Companies shall not be responsible for the user's programming of a programmable Product, or any consequence thereof.

Performance Data.
Data presented in Omron Company websites, catalogs and other materials is provided as a guide for the user in determining suitability and does not constitute a warranty. It may represent the result of Omron's test conditions, and the user must correlate it to actual application requirements. Actual performance is subject to the Omron's Warranty and Limitations of Liability.

Change in Specifications.
Product specifications and accessories may be changed at any time based on improvements and other reasons. It is our practice to change part numbers when published ratings or features are changed, or when significant construction changes are made. However, some specifications of the Product may be changed without any notice. When in doubt, special part numbers may be assigned to fix or establish key specifications for your application. Please consult with your Omron's representative at any time to confirm actual specifications of purchased Product.

Errors and Omissions.
Information presented by Omron Companies has been checked and is believed to be accurate; however, no responsibility is assumed for clerical, typographical or proofreading errors or omissions.

2013.7

In the interest of product improvement, specifications are subject to change without notice.

OMRON Corporation
Industrial Automation Company

http://www.ia.omron.com/