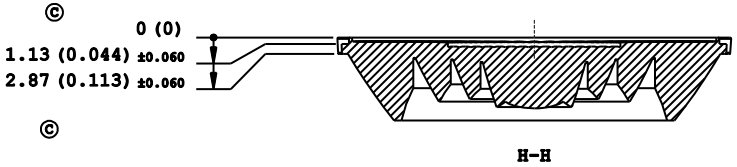

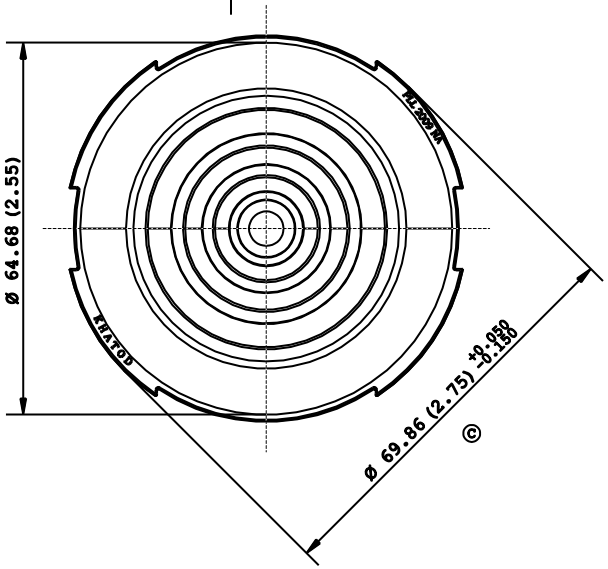

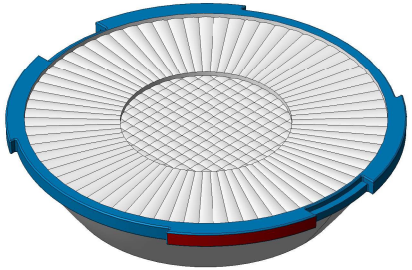

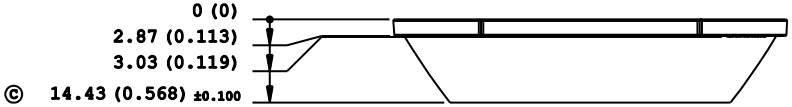

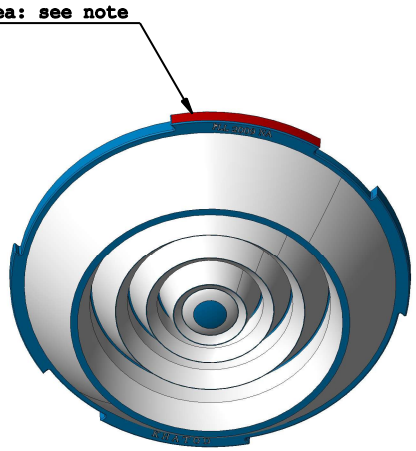

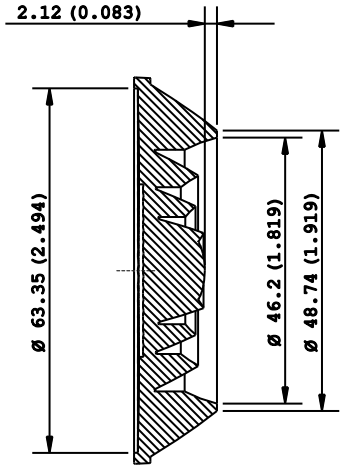

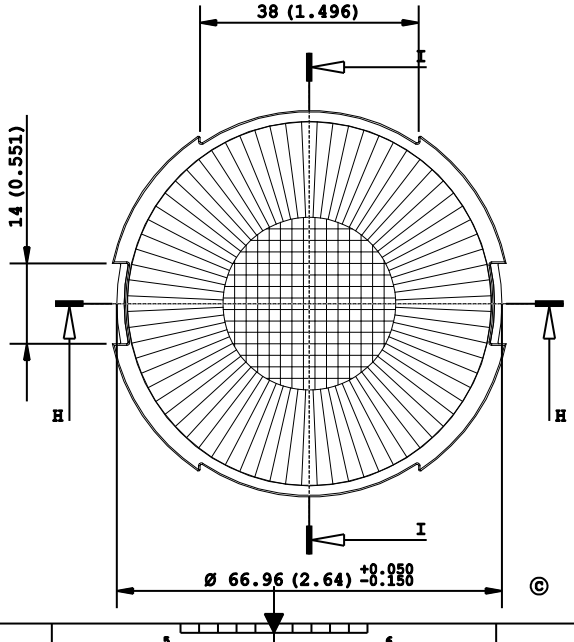

Note:
- Dimensions in inches into brackets
- For missing dimensions see 3D file
- WHITE surfaces: mirror polished
- BLUE surfaces: embossed 25/27 VDI
- RED surface: available area for gate material.
  Sink mark injection will be present
- Ⓒ: Quality Control Dimension (QCD)

'' Project and design owned by Khatod OPTOELECTRONIC s. r. l.''
The technical solutions adopted in this design are Khatod intellectual property, they cannot be reproduced and trasmitted to third parties without our prior written permission.
Unauthorized disclosure of confidential proprietary information will be prosecuted by law.

DESCRIPTION : Fresnel Lens	DESIGNER : LM/LS		PROJECTS : Bassett
CODE : PLL 2009 NA	CHECKED : LM	CONTROLLED: LS	DATA : 05/12/2016
KHATOD Via Alessandrina,25 Cusano Milanino MILANO ITALIA WWW.KHATOD.COM	All Dimensions in mm General Tolerances +/-0.20 mm	HEAT TREATMENT: No One	MATERIAL: Pmma
		SCALE : 1 : 1	SHEET : 1 of 1